Weekly Report

Jyothsna Padma Kandarpa
National Institute of Technology Warangal

July 4, 2025

Overview

This week, I worked on building a complete OOK (On-Off Keying) free-space optical communication system and studied polarization controllers. The goal was to gain hands-on experience in laser modulation, circuit design, and signal reception.

OOK System Implementation

Figure 1: OOK Setup

Transmitter Side

An Arduino UNO was used to transmit a binary sequence (e.g., `"101011"`) using PWM. A laser driver circuit ensured safe operation of the laser diode by maintaining a current of 39.8 mA using a 100 Ω current sense resistor and a voltage divider for reference voltage generation.

Laser Driver Design

The laser driver was built using an op-amp and an NPN BJT in a feedback loop. It maintained a stable current by generating a reference voltage across a resistor. This ensured that the laser operated safely within its optimal current range (30 mA-50 mA).

Receiver Side

The receiver included a photodiode and a two-stage amplifier. A TIA (Transimpedance Amplifier) converted the photocurrent to voltage using an OP777 op-amp and a feedback resistor of 100 Ω.

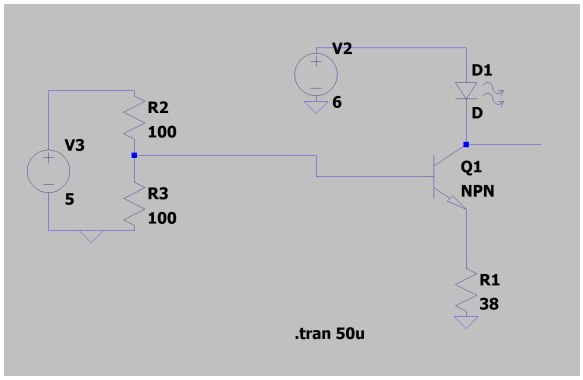

Figure 2: Laser driver stimulation on LT Spice

A second stage inverted the signal for Arduino compatibility.

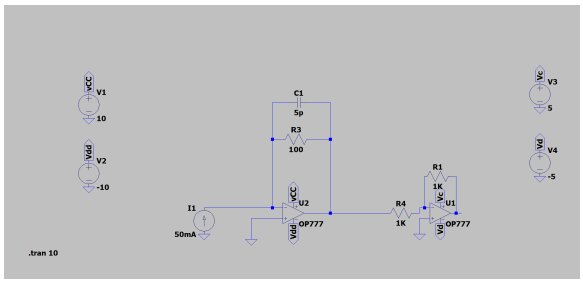

Figure 3: TIA Circuit simulation with inversion in LT Spice

Challenges

The laser driver circuit works well. However, the TIA + photodetector part has issues and is currently under testing.

PWM and Arduino

PWM output pins (3, 9, 10, 11) were used to modulate the laser with controlled duty cycles. The `analogWrite()` function was used to send signals corresponding to binary data.

Understanding Polarization Controllers

Last time i submitted my weekly report you shared two papers. Following is my understanding of them : During the study of polarization controllers, I explored how fiber stress alters light polarization. Stress-induced birefringence—by bending and twisting fiber loops—was key to changing the polarization state of transmitted light.

From the Literature:

Insights from Simon and Mukunda (1990)

The polarization controller, made from quarter-wave plates (QWP) and half-wave plates (HWP), can realize any SU(2) transformation. A minimal and complete polarization controller can be built using:

- One half-wave plate and two quarter-wave plates.
- These can be arranged in configurations like Q-H-Q or H-Q-Q.

This means, mechanically, only three rotating optical elements (paddles) are needed to achieve full control of polarization. Each paddle rotates to introduce specific phase shifts.

Insights from Tan et al. (2024)

This paper focuses on real-time polarization compensation in quantum communication. The method:

- Detects channel Muller parameters (which describe how polarization changes in a medium).
- Applies gradient descent to compute the optimal settings for the polarization controller.
- Works well in both fiber and free-space links, with fewer waveplates and faster control.

In practical systems, three paddles (2-3-2 loops) are often used to mimic QWP-HWP-QWP arrangement. Each paddle affects the polarization on different axes of the Poincaré sphere—essential for achieving any desired polarization state.

Summary: The literature emphasizes that using only three optical components, polarization can be fully controlled. This understanding is critical for aligning and stabilizing laser communication systems in experiments like mine, especially when interfacing with free-space links and maintaining signal fidelity.

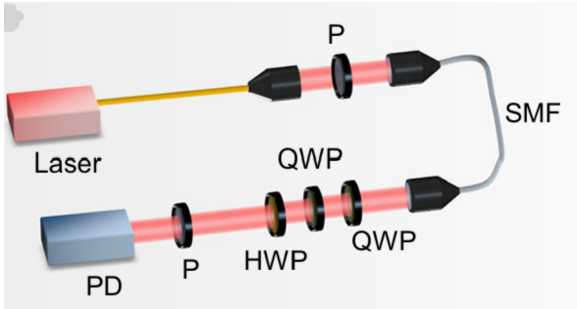

Figure 4: Caption

Next Steps

- Troubleshoot and fix the TIA + detector circuit.
- Integrate both the laser driver and detector parts.
- Complete the full experimental setup.

References

ADC in Arduino — ElectronicWings

Laser Diode Driving Circuits — Mouser

Texas Instruments — TIA Design Guide